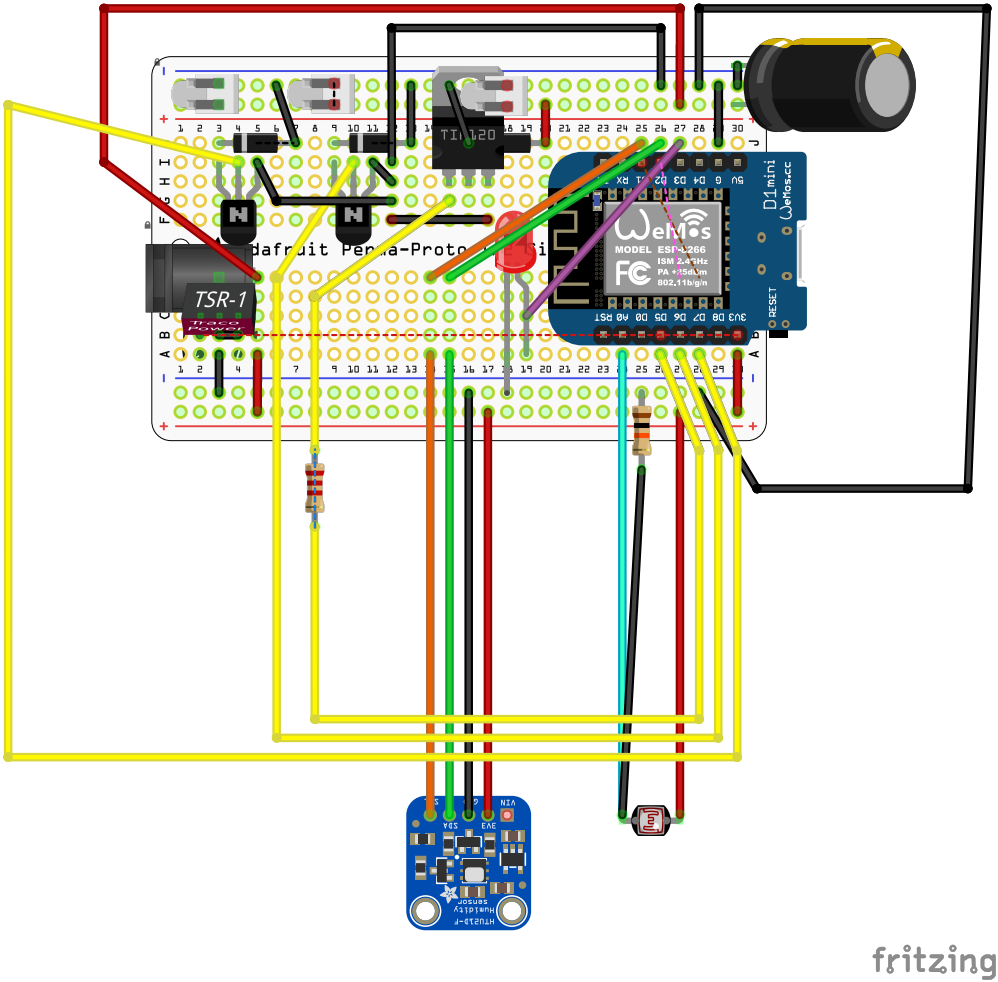
TSR-1
Traco Power
WeMos
MODEL ESP-1266
ISM 2.4GHz
PA +25dBm
802.11b/g/n
D1mini
WeMos.cc
RESET
Humidity
Sensor
HTU21D-F

fritzing